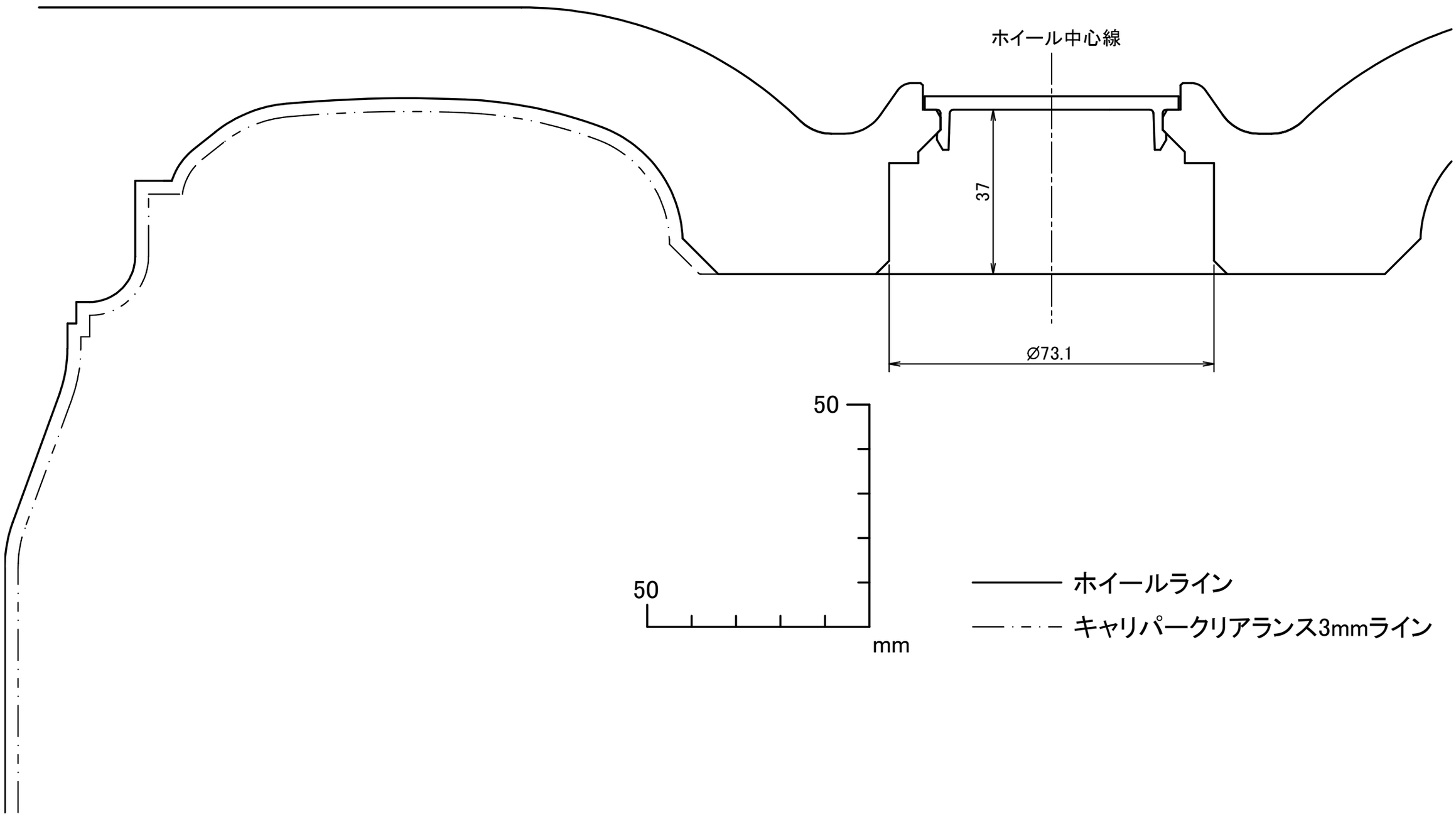TWS_Exlete_107M 19inch Middle
【H/P.C.D】5/114.3 Step Rim